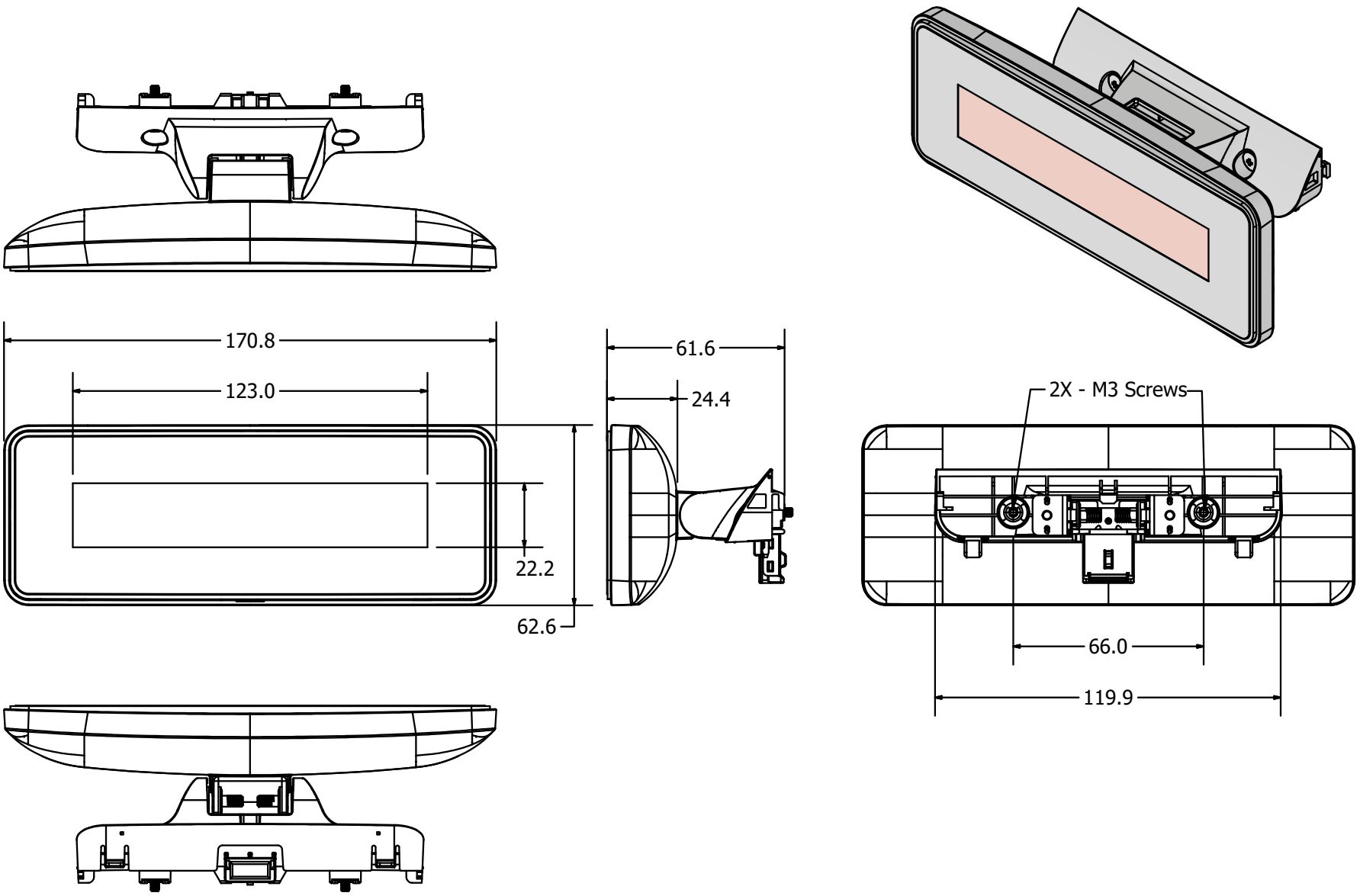


| REV | DATE | DESCRIPTION | BY |
|---|---|---|---|
| | | | |
| | | | |
| | | | |
| | | | |
| | | | |
| | | | |

THIS DRAWING AND OR TECHNICAL INFORMATION IS THE SOLE PROPERTY OF TES AMERICA, LLC. AND IS FURNISHED FOR AUTHORIZED USE ONLY AND ON THE UNDERSTANDING AND CONDITION THAT IT IS CONFIDENTAL. NEITHER THIS DOCUMENT NOR THE INFORMATION DISCLOSED HEREIN SHALL BE DISCLOSED TO OTHERS, COPIED, REPRODUCED OR OTHERWISE TRANSFERRED TO OTHER DOCUMENTS, OR USED FOR MANUFACTURING OR ANY OTHER PURPOSE EXCEPT AS AUTHORIZED BY TES AMERICA, LLC.

TOLERANCING
UNLESS OTHERWISE SPECIFIED
ALL DIMS ARE mm

| | | | |
|---|---|---|---|
| .X | ± 0.20 | RADIUS | ± 0.15 |
| .XX | ± 0.10 | ANGLES | ± 0.5° |

DO NOT SCALE DRAWING

MicroTouch

HOLLAND, MI 49423 - USA

LCM-150-A1
LCM Module

| | | | |
|---|---|---|---|
| DR: | CK: | Material: | SCALE: NTS |
| DATE: 1/1/2024 | | | SHEET: 1 OF 1 |
| DWG. No. F81574016KIT | | | VER. 01 |

THIRD ANGLE VIEW